# CA39 Series Hermetically Sealed, with GJB Standdarcl , Non-solid Electrolytic Tantalum Capacitor

## Brief Introduction

- Tantalum case encapsulation , Hermetically-Sealed,Tubular, Axial-lead , With insulation sleeve , Heteropolarity ;
- Sable in Electrical Characteristics& Storage, High reliability, Long life-span, ectrical parameters is alike CLR81 Series products inMIL-PRF-39006/25 CLR79;
- Anti 3V Reverse Voltage & 415mA~2360mA Ripple Current
- Applying in Aerospace Plane , Space Navigation , Satellites, Missiles, Sea(Land) Cables, Telecommunications, such Electrical Equipments with DC& Impulse Circuit for Military and Civil use;
- Operative Standard: GJB733A-96 QJ/PWV91-2000

## Features

- Operaing Temperature Range:-55℃~125℃ ( 125℃ with rated voltage derating ) ;
- Capacitance tolerance: K : ±10%; M : ±20%;
- DC Leakage at 25℃,85℃,125℃ : See table2;
- DF ( tgδ ) at 25℃: Not exceed the parameterin table2;
- Ripple Current: Not exceed the parameterin table2;
- ESR of Negative Temperature: Not exceed the parameter in table2;
- Dimensions & Max Weight : See Table 1 & Figure 1;
- Rated Voltage, Derating Voltage, Nominal Capacitance: See figure 2;

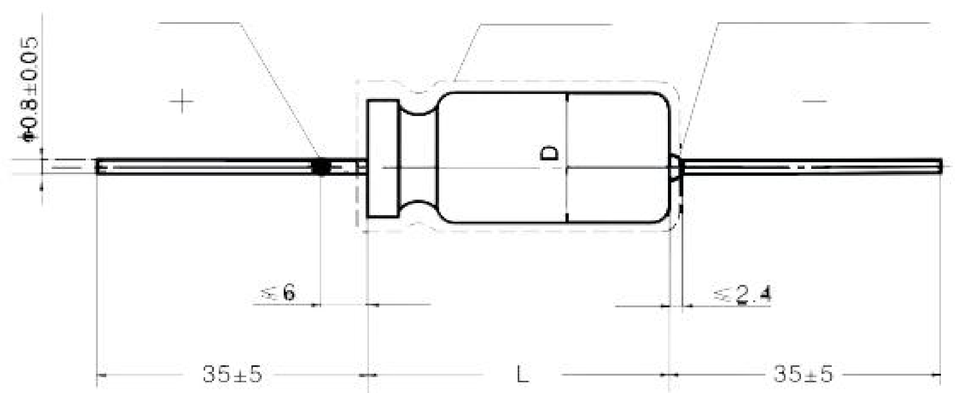


## Table1 Dimensions and Max weight

| Case Code | Max Weight(g) | with no Insulation Sleeve | | with Insulation Sleeve | |
|---|---|---|---|---|---|
| | | D±0.4 ( mm ) | $L^{+0.8}_{-0.4}$ ( mm ) | $D_1$max ( mm ) | $L_1$max ( mm ) |
| T1 | 3.0 | 4.78 | 11.51 | 5.58 | 14.31 |
| T2 | 7.0 | 7.14 | 16.28 | 7.94 | 19.08 |
| T3 | 12.0 | 9.52 | 19.46 | 10.32 | 22.26 |
| T4 | 18.0 | 9.52 | 26.97 | 10.32 | 29.77 |

Table2 Electrical Characteristics

| $U_R$(V) Rated Voltage | $U_C$(V) Category Voltage | Case Code | Nominal Capacitance $C_R$ ( μF) | DCL(μA) 25℃ | DCL(μA) 85℃ 125℃ | DC&Ripple Current | (%) 25℃ | ESR ( Ω ) -55℃ 100Hz |
|---|---|---|---|---|---|---|---|---|
| 6 | 4 | T1 | 30 | 1 | 2 | 820 | 9 | 100 |
| | | T1 | 68 | 1 | 2 | 960 | 15 | 60 |
| | | T2 | 140 | 1 | 3 | 1200 | 21 | 40 |
| | | T2 | 270 | 1 | 6.5 | 1375 | 45 | 25 |
| | | T3 | 330 | 2 | 7.9 | 1800 | 36 | 20 |
| | | T3 | 560 | 2 | 13 | 1900 | 55 | 25 |
| | | T4 | 1200 | 3 | 14 | 2265 | 90 | 20 |
| 8 | 5 | T1 | 25 | 1 | 2 | 820 | 7.5 | 100 |
| | | T1 | 56 | 1 | 2 | 900 | 14 | 59 |
| | | T2 | 120 | 1 | 2 | 1220 | 20 | 50 |
| | | T2 | 220 | 1 | 7 | 1370 | 37 | 30 |
| | | T3 | 290 | 2 | 6 | 1770 | 34 | 25 |
| | | T3 | 430 | 2 | 14 | 1825 | 46 | 25 |
| | | T4 | 850 | 4 | 16 | 2330 | 60 | 22 |
| 10 | 7 | T1 | 20 | 1 | 2 | 820 | 6 | 175 |
| | | T1 | 47 | 1 | 2 | 855 | 13 | 100 |
| | | T2 | 100 | 1 | 4 | 1200 | 15 | 60 |
| | | T2 | 180 | 1 | 7 | 1365 | 30 | 40 |
| | | T3 | 250 | 2 | 10 | 1720 | 30 | 30 |
| | | T3 | 390 | 2 | 16 | 1800 | 44 | 25 |
| | | T4 | 750 | 4 | 16 | 2360 | 50 | 23 |
| 15 | 10 | T1 | 15 | 1 | 2 | 780 | 5 | 155 |
| | | T1 | 33 | 1 | 2 | 820 | 10 | 90 |
| | | T2 | 70 | 1 | 4 | 1150 | 13 | 75 |
| | | T2 | 120 | 1 | 7 | 1450 | 18 | 50 |
| | | T3 | 170 | 2 | 10 | 1480 | 25 | 35 |
| | | T3 | 270 | 2 | 16 | 1740 | 32 | 30 |
| | | T4 | 540 | 6 | 24 | 2330 | 40 | 23 |
| 25 | 15 | T1 | 10 | 1 | 2 | 715 | 4 | 220 |
| | | T1 | 22 | 1 | 2 | 825 | 6.6 | 140 |
| | | T2 | 50 | 1 | 2 | 1130 | 11 | 70 |
| | | T2 | 100 | 1 | 10 | 1435 | 15 | 50 |
| | | T3 | 120 | 2 | 6 | 1450 | 21 | 38 |
| | | T3 | 180 | 2 | 18 | 1525 | 26 | 32 |
| | | T4 | 350 | 7 | 28 | 1970 | 35 | 24 |
| 30 | 20 | T1 | 8 | 1 | 2 | 640 | 4 | 275 |
| | | T1 | 15 | 1 | 2 | 780 | 5 | 175 |
| | | T2 | 40 | 1 | 5 | 1120 | 10 | 65 |
| | | T2 | 68 | 1 | 8 | 1285 | 13 | 60 |

| $U_R$(V) Rated Voltage | $U_C$(V) Category Voltage | Case Code | Nominal Capacitance $C_R$ ( μF) | DCL(μA) 25℃ | DCL(μA) 85℃ 125℃ | DC&Ripple Current | (%) 25℃ | ESR ( Ω ) -55℃ 100Hz |
|---|---|---|---|---|---|---|---|---|
| 30 | 20 | T3 | 100 | 2 | 12 | 1450 | 17 | 40 |
| | | T3 | 150 | 2 | 18 | 1525 | 23 | 35 |
| | | T4 | 300 | 8 | 32 | 1950 | 31 | 25 |
| 50 | 30 | T1 | 5 | 1 | 2 | 580 | 3 | 400 |
| | | T1 | 10 | 1 | 2 | 715 | 4 | 250 |
| | | T2 | 25 | 1 | 5 | 1005 | 8 | 95 |
| | | T2 | 47 | 1 | 9 | 1155 | 11 | 70 |
| | | T3 | 60 | 2 | 12 | 1335 | 12 | 45 |
| | | T3 | 82 | 2 | 16 | 1400 | 15 | 45 |
| | | T4 | 160 | 8 | 32 | 1900 | 17 | 27 |
| 60 | 40 | T1 | 4 | 1 | 2 | 525 | 2.8 | 550 |
| | | T1 | 8.2 | 1 | 2 | 625 | 4 | 275 |
| | | T2 | 20 | 1 | 5 | 930 | 7 | 105 |
| | | T2 | 39 | 1 | 9 | 1110 | 10 | 90 |
| | | T3 | 50 | 2 | 12 | 1300 | 10 | 50 |
| | | T3 | 68 | 2 | 16 | 1365 | 13 | 50 |
| | | T4 | 140 | 8 | 32 | 1850 | 16 | 28 |
| 75 | 50 | T1 | 3.5 | 1 | 2 | 525 | 2.5 | 650 |
| | | T1 | 6.8 | 1 | 2 | 610 | 3.5 | 300 |
| | | T2 | 15 | 1 | 5 | 890 | 6 | 150 |
| | | T2 | 33 | 1 | 10 | 1000 | 10 | 90 |
| | | T3 | 40 | 2 | 12 | 1250 | 9 | 60 |
| | | T3 | 56 | 2 | 17 | 1335 | 11 | 60 |
| | | T4 | 110 | 9 | 36 | 1850 | 12 | 29 |
| 100 | 65 | T1 | 2.5 | 1 | 2 | 505 | 2 | 950 |
| | | T1 | 4.7 | 1 | 2 | 565 | 3 | 500 |
| | | T2 | 11 | 1 | 4 | 835 | 5 | 200 |
| | | T2 | 22 | 1 | 9 | 965 | 7.5 | 100 |
| | | T3 | 30 | 2 | 12 | 1240 | 7 | 80 |
| | | T3 | 43 | 2 | 17 | 1335 | 8.5 | 70 |
| | | T4 | 86 | 9 | 36 | 1800 | 10 | 30 |
| 125 | 85 | T1 | 1.7 | 1 | 2 | 415 | 2 | 1250 |
| | | T1 | 3.6 | 1 | 2 | 520 | 2.7 | 600 |
| | | T2 | 9 | 1 | 5 | 755 | 5 | 240 |
| | | T2 | 14 | 1 | 7 | 860 | 6 | 167 |
| | | T3 | 18 | 2 | 9 | 1130 | 5 | 129 |
| | | T3 | 25 | 2 | 13 | 1200 | 6 | 93 |
| | | T4 | 56 | 10 | 40 | 1800 | 6.5 | 32 |