Series Hybrid Tantalum Capacitor

Brief Introduction

- Tantalum case encapsulation, Hermetically Sealed, Cylindrical , Axial-lead , Heteropolarity ;
- Commingled by Electrolytic Tantalum Capacitor and Electrochemical Capacitor, Small in size, Super Capacitance, This series products is firstly witnessed at home;
- Stable in Electrical Performances, High Reliability, Long life-span, Maximum in the Density of Capacitance and Energy;
- Built-in as battery in Energy-conversed-circuit &Powr-pulsed-circuit, functioned as filtering, storage energy, blackout& delaying;
- Operative Standard: GJB733A-96、QJ/PWV20102-2004

Features

- Operating Temperature Range: -55℃~+125℃(when > +125℃ , with rated voltage derating)
- Storage Temperature Range: -62℃ ~ +130?℃
- Capacitance Tolerance: Q: -10%~+30% ; M:±20%;
- Electrical Performances: See tables
- Dimensions、Fixing Frame : See Table ;

Table1 Electrical Characteristics

Dimensions and Fixing Frame See Figure

(V) Rated Voltage	(V) Category Voltage	(V) Ripple Current	(μF) Nominal Capacitance	tgδ (%)	ESR (Ω) 1kHz	DCL (μA)	100Hz Impedance	Range of capacitance		(g) Max Weight
						25℃	-55℃	-55℃	85℃	
10	6	11	8000	80	0.3	100	8	-80	+160	28
16	9.5	17.6	7000	70	0.3	125	8	-80	+160	28
25	15	27.5	5000	60	0.3	150	8	-75	+150	28
35	20	38.5	3500	50	0.3	150	8	-70	+140	28
50	30	55	2500	46	0.3	155	9.6	-60	+120	28
63	38	70	1200	35	0.4	85	11.2	-50	+80	28
80	48	88	860	30	0.4	90	12.8	-40	+80	28
100	60	110	400	25	0.5	25	14.4	-30	+60	28
110	66	121	200	20	0.5	25	16	-25	+50	28
125	75	138	160	20	0.6	25	19.2	-20	+50	28

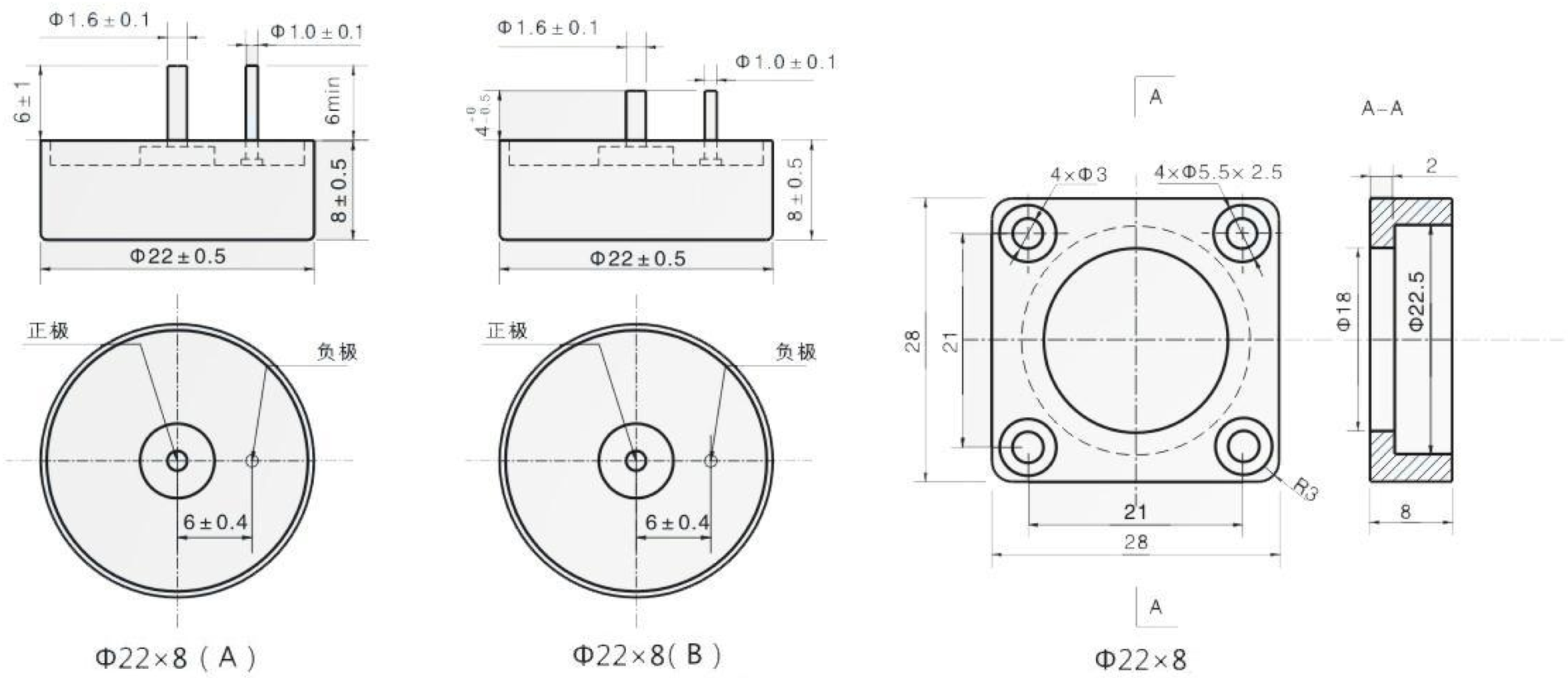

Figure1 Dimensions and Fixing Frame

TTable1 Electrical Characteristics

Dimensions and Fixing Frame See Figure

(V) Rated Voltage	(V) Category Voltage	(V) Ripple Current	(μF) Nominal Capacitance	tgδ (%)	ESR (Ω) 1kHz	(μA)		100Hz Impedance	Range of capacitance		(g) Max Weight
						25℃	85℃,125℃	-55℃	-55℃	85℃	
10	6	11	50000	180	0.05	150	900	1	-75	+140	52
16	9.5	17.6	30000	160	0.05	150	900	1	-70	+140	52
25	15	27.5	18000	120	0.05	150	900	1	-65	+120	52
35	20	38.5	12000	90	0.05	150	900	1	-50	+120	52
50	30	55	8000	65	0.07	170	1000	1.2	-45	+90	52
63	38	70	1800	40	0.2	126	1000	1.4	-20	+60	52
63	38	70	4000	45	0.1	170	1000	1.4	-30	+80	52
80	48	88	1600	20	0.15	100	1000	1.6	-20	+60	52
80	48	88	2800	40	0.1	200	1200	1.6	-30	+80	52
100	60	110	1200	35	0.125	200	1200	1.8	-25	+60	52
110	66	121	580	35	0.2	200	1200	2	-20	+50	52
125	75	138	560	35	0.2	200	1200	2.4	-15	+50	52

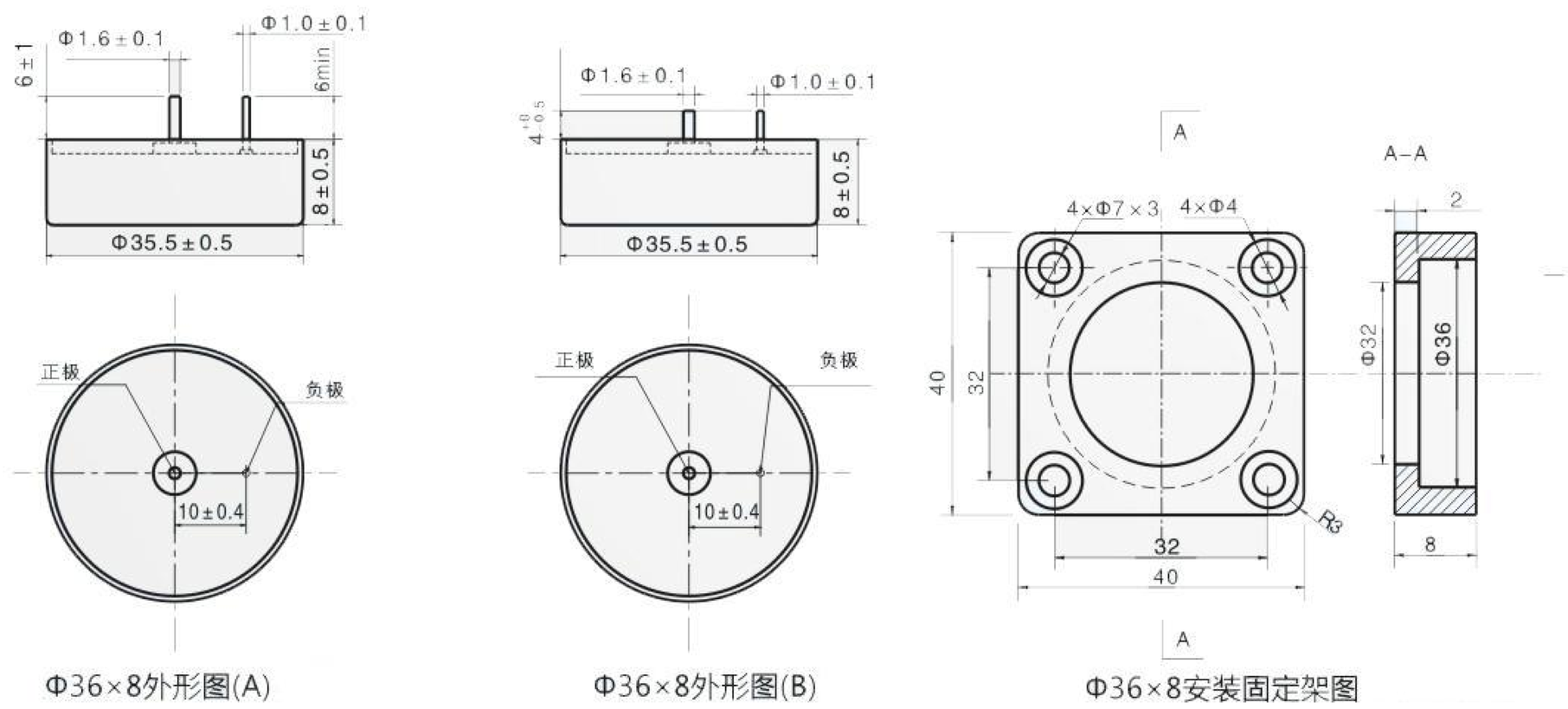

Figure2 Dimensions and Fixing Frame